Make your boundaries **stand out**

SURFACE-MOUNTED LUMINAIRE(WALL) SERIES

PRODUCT INFORMATION

- Surface mounted that is designed for outdoor decorative lighting applications.
- Ideal for edges lighting on landmarks and monuments.
- ILLUS SURFACE MOUNTED Luminaire(WALL) gives the customer the flexibility to choose between 9 CCT based on their specific need.

BENEFITS

- Compact size.
- Light weight.

FEATURES

- Operating voltage 220 – 240 V.
- Non – dimmable.

illus
illumination

BEYOND LIGHT..
TO THE LAST DETAILS!

AREAS OF APPLICATION

Commercial

Shopping Center

Educational center

Garden

TECHNICAL OPERATING & ELECTRICAL DATA

Input Voltage & Frequency	AC220-240V, 50/60Hz
Ingress Protection Rating	IP44,54
Dimming	Non-Dimmable

SPECIFICATIONS

Code No.	Model No.	Max.LED Bulb Wattage	Lamp Holder Type	Body Color
541034	ILSSMOWF01	1x.Max.23W	E27	Dark grey
541038	ILSSMOWF02	1x.Max.23W	E27	Dark grey
541042	ILSSMOWF03	1x.Max.23W	E27	Dark grey
541050	ILSSMOWF04	1x.Max.23W	E27	Dark grey
541057	ILSSMOWF06	1x.Max.23W	E27	Dark grey
541059	ILSSMOWF07	1x.Max.23W	E27	Dark grey
541123	ILSSMOWF09	1x.Max.23W	E27	Dark grey
541146	ILS13SMOPJL01	1x.Max.23W	E27	Dark grey
541147	ILSSMOWF11	1x.Max.23W	E27	Dark grey

DIMENSIONS

Code No.	Model No.	Diameter	Height	Length	Width
541034	ILSSMOWF01		250	172	129
541038	ILSSMOWF02		211	197	168
541042	ILSSMOWF03		211	197	168
541050	ILSSMOWF04		250	120	170
541057	ILSSMOWF06		250	153	203
541059	ILSSMOWF07		149	129	242
541123	ILSSMOWF09		276	166	140
541146	ILSSMOWF10		209	175	406
541147	ILSSMOWF11		209	175	406

illus
illumination

DIMENSIONS

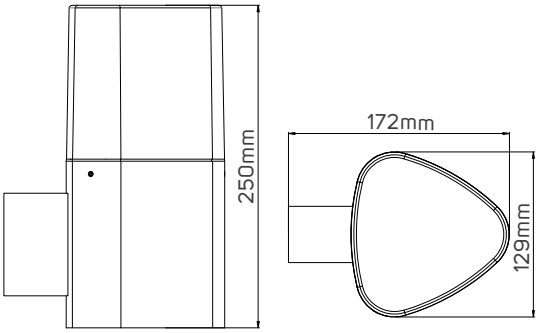

541034

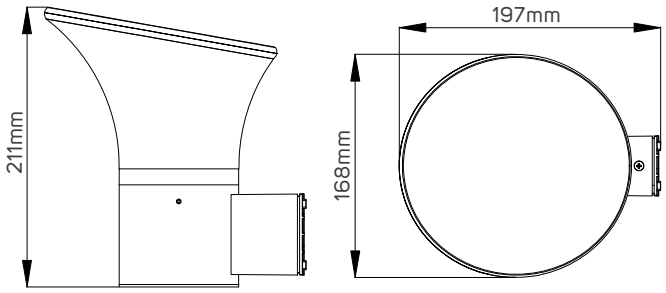

541038, 541042

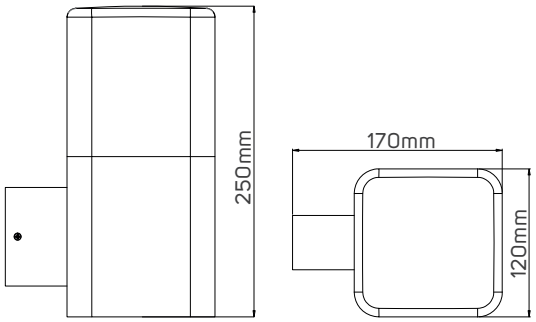

541050

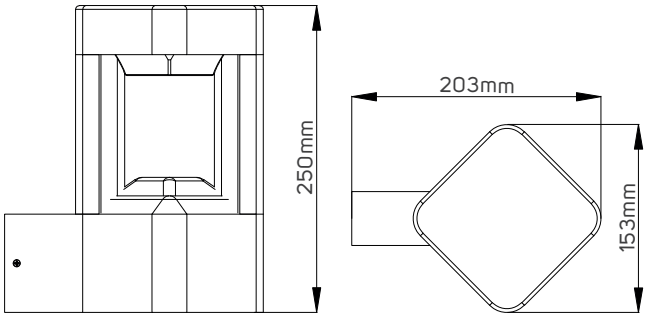

541057

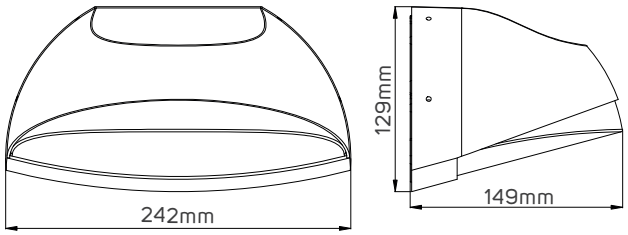

541059

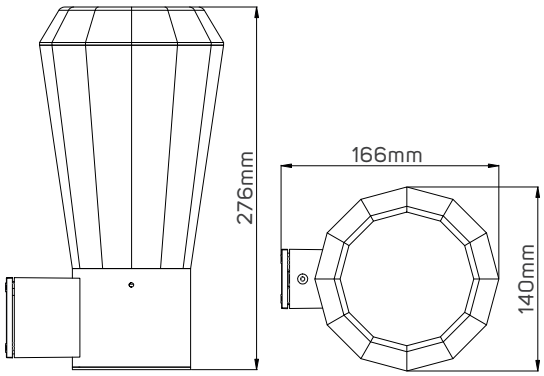

541123

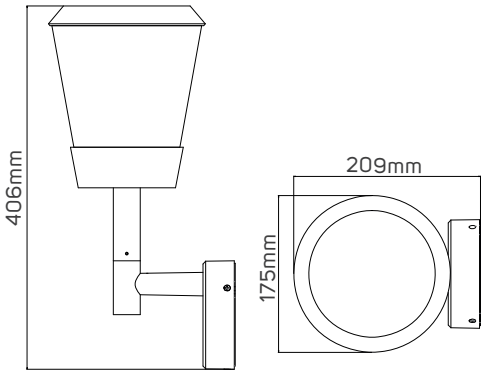

541146, 541147

illus
illumination

APPLICATION PICTURE

**BEYOND LIGHT..
TO THE LAST DETAILS!**

SURFACE-MOUNTED LUMINAIRE(WALL) SERIES

illus
illumination

Carrer de la Vall de la Ballestera, 64, 46015 València, Valencia, España, Tel: +34619824456 www.illusillumination.com

illus illumination reserve the right to make dimensional, design and technical alternations without prior notice. illus illumination endeavor to ensure that any advice, recommendation or information it provides in product literature is accurate and correct. However due to the fact that illus do not have direct control on where and how the products are installed, illus illumination cannot accept any liability either direct or indirect arising from the use of illus products whether or not in accordance with any advice, specification, recommendation or information provided by illus illumination or its distributors.

08122021V1