Creating attractive inner-city landscapes

BOLLARD LUMINAIRE SERIES

PRODUCT INFORMATION

- Creative bollard solution which enables you to build a more attractive space by avoiding verticalization of the urban landscape.
- Optimized light distribution options you can maximize spacing between the bollards, therefore minimizing the number of light points needed to be installed.

BENEFITS

- Discreet design nicely blending into modern inner-city spaces.
- Attractive total cost of ownership.

FEATURES

- Operating voltage 220 – 240 V.
- Non – dimmable.

illus
illumination

BEYOND LIGHT..
TO THE LAST DETAILS!

AREAS OF APPLICATION

Commercial

Shopping Center

Educational center

Garden

TECHNICAL OPERATING & ELECTRICAL DATA

Input Voltage & Frequency	AC220-240V, 50/60Hz
Ingress Protection Rating	IP44
Dimming	Non-Dimmable

SPECIFICATIONS

Code No.	Model No.	Max.LED Bulb Wattage	Lamp Holder Type	Body Color
541031	ILSSMOBDF01	1x.Max.23W	E27	Dark grey
541032	ILSSMOBDF02	1x.Max.23W	E27	Dark grey
541033	ILSSMOBDF03	1x.Max.23W	E27	Dark grey
541035	ILSSMOBDF04	1x.Max.23W	E27	Dark grey
541036	ILSSMOBDF05	1x.Max.23W	E27	Dark grey
541037	ILSSMOBDF06	1x.Max.23W	E27	Dark grey
541039	ILSSMOBDF07	1x.Max.23W	E27	Dark grey
541040	ILSSMOBDF08	1x.Max.23W	E27	Dark grey
541041	ILSSMOBDF09	1x.Max.23W	E27	Dark grey
541047	ILSSMOBDF10	1x.Max.23W	E27	Dark grey
541048	ILSSMOBDF11	1x.Max.23W	E27	Dark grey
541049	ILSSMOBDF12	1x.Max.23W	E27	Dark grey

DIMENSIONS

Code No.	Model No.	Diameter	Height	Length	Width
541031	ILSSMOBDF01	170	300		
541032	ILSSMOBDF02	170	500		
541033	ILS10.5RMOIGL01	170	800		
541035	ILSSMOBDF04		300	168	175
541036	ILSSMOBDF05		500	168	175
541037	ILSSMOBDF06		800	168	175
541039	ILSSMOBDF07		300	168	175
541040	ILSSMOBDF08		500	168	175
541041	ILSSMOBDF09		800	168	175
541047	ILSSMOBDF10	170	300		
541048	ILSSMOBDF11	170	500		
541049	ILSSMOBDF12	170	800		

illus
illumination

DIMENSIONS

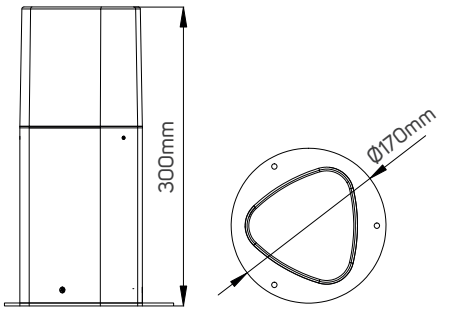

541031

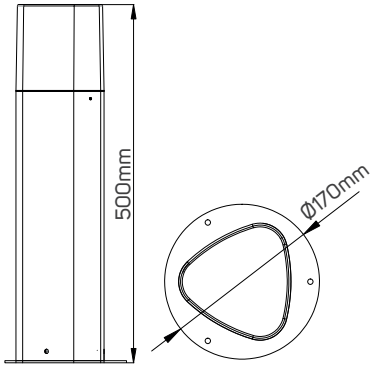

541032

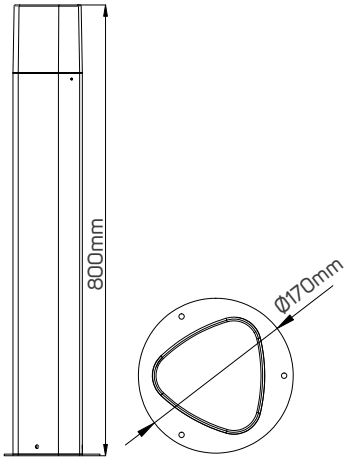

541033

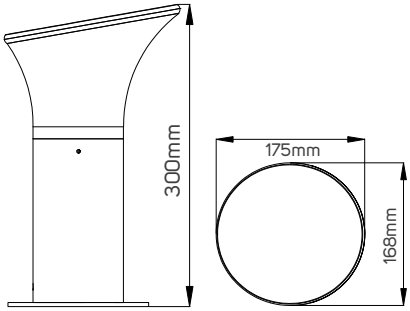

541035, 541039

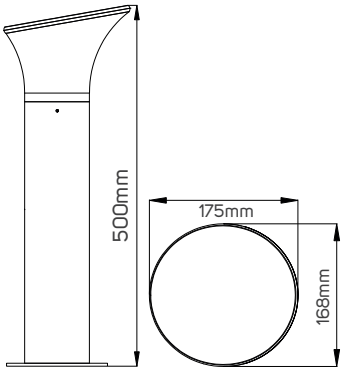

541036, 541040

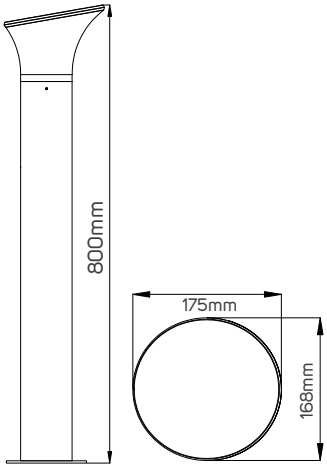

541037, 541041

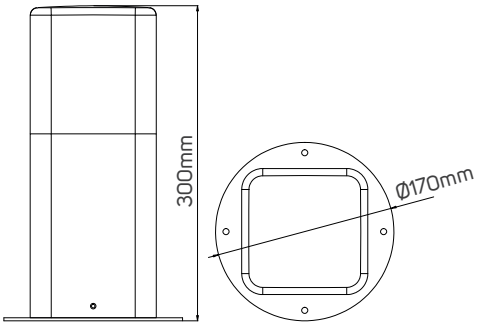

541047

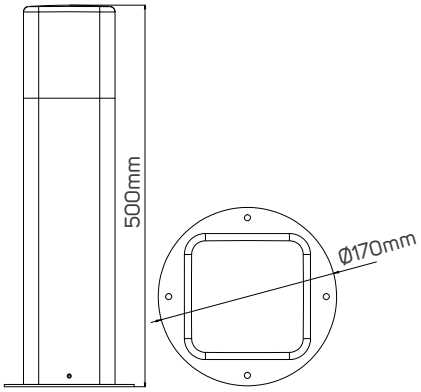

541048

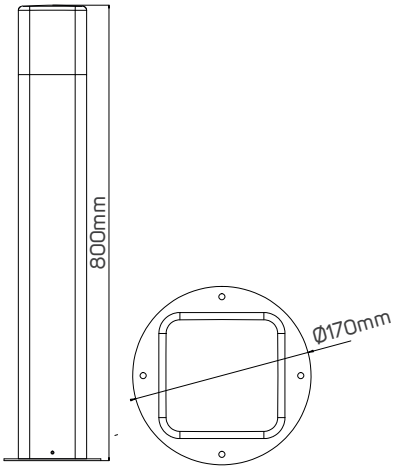

541049

illus
illumination

APPLICATION PICTURE

**BEYOND LIGHT..
TO THE LAST DETAILS!**

BOLLARD LUMINAIRE SERIES

illus
illumination

Carrer de la Vall de la Ballestera, 64, 46015 València, Valencia, España, Tel: +34619824456 www.illusillumination.com

illus illumination reserve the right to make dimensional, design and technical alternations without prior notice. illus illumination endeavor to ensure that any advice, recommendation or information it provides in product literature is accurate and correct. However due to the fact that illus do not have direct control on where and how the products are installed, illus illumination cannot accept any liability either direct or indirect arising from the use of illus products whether or not in accordance with any advice, specification, recommendation or information provided by illus illumination or its distributors.

08122021V1