LED PRO



LED MAGNETIC TRACK FLOOD LIGHT (Corner)

PRODUCT INFORMATION

- The SIMON LED Magnetic Track Floodlight (Corner) is designed for use with magnetic track systems, providing wide-angle illumination for cohesive and integrated lighting layouts.
- Compatible with 48V DC magnetic tracks, this fixture ensures even light coverage and effortless adaptability within modern, modular lighting setups.
- The LED Magnetic Track Floodlight is offered in 2 models, each engineered to deliver high-performance illumination from 1650lm up to 1750lm.

BENEFITS

- Flexible magnetic mounting allows easy setup and corner adjustments.
- Energy-efficient design delivers brilliant lighting with minimal power use.
- Corner-compatible magnetic track modules are designed to provide seamless illumination for inside and outside corners.
- Versatile lighting for homes, offices, and retail environments.

FEATURES

- High CRI ≥95.
- Efficacy up to 88lm/W..
- Long Lifespan 30000H.
- Input Voltage DC48V.
- Non-Dimmable.

CE CB RoHS III

AREAS OF APPLICATION

Hospitality

Shopping Center

Commercial

Educational Center

TECHNICAL OPERATING & ELECTRICAL DATA

Body Material	Aluminum + Plastic
Body Color	Sandy Black
Rated CRI	≥95
Input Voltage	DC48V
IEC Classification	Class III
Ambient Temperature	45°C
Beam Angle	110°
Dimming	Non-Dimmable
IP Rating	IP20
Lifespan	30000H
Switching Cycle	100000x on/off
Warranty Period	36 Months

SPECIFICATIONS

Code No.	Model No.	Power	Lumen	Efficacy	CCT	Current
SM241079	SIM20CFMTR930WW01	20W	1650lm	82.50lm/W	3000K	430mA
SM241080	SIM20CFMTR940NW01	20W	1750lm	87.50lm/W	4000K	430mA

DIMENSIONS

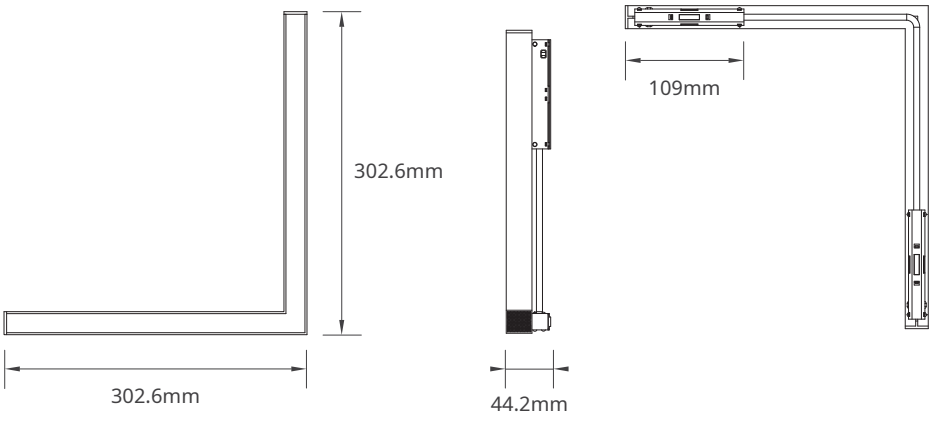

ACCESSORIES SPECIFICATIONS

Code No.	Model No.	Body Color	Body Material
SM241081	SIM100DRMTR01	Sandy Black	Aluminum + Plastic
SM241082	SIM200DRMTR01	Sandy Black	Aluminum + Plastic
SM241083	SIM3SMTRK01	Sandy Black	Aluminum
SM241084	SIM2SMTRK01	Sandy Black	Aluminum
SM241085	SIM1SMTRK01	Sandy Black	Aluminum
SM241086	SIM3RMTRK01	Sandy Black	Aluminum
SM241087	SIM2RMTRK01	Sandy Black	Aluminum
SM241088	SIM1RMTRK01	Sandy Black	Aluminum
SM241089	SIMRCON01	Sandy Black	Aluminum
SM241090	SIMRCON02	Sandy Black	Aluminum
SM241091	SIMSCON01	Sandy Black	Aluminum
SM241092	SIMSCON02	Sandy Black	Aluminum
SM241093	SIMDCOB01	Sandy Black	Plastic
SM241094	SIMF2COB01	Sandy Black	Plastic
SM241095	SIMFCOB01	Sandy Black	Plastic
SM241096	SIMPKITMT01	Chrome	Stainless Steel
SM241097	SIMSSCNT01	Sandy Black	Iron

SPECIFICATIONS

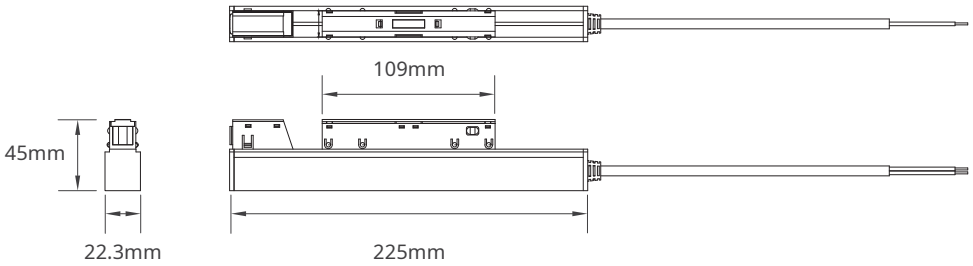

SM241081

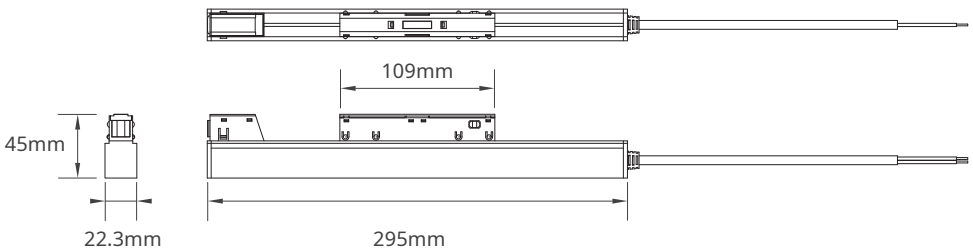

SM241082

SPECIFICATIONS

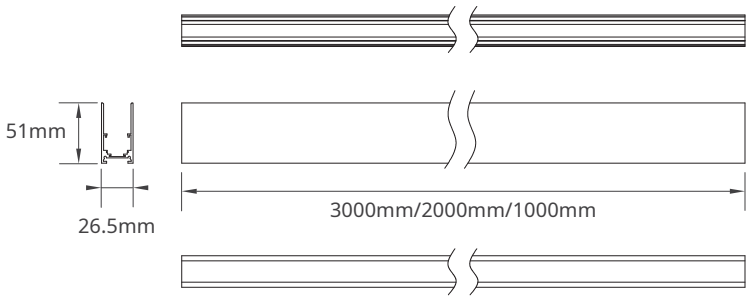

SM241083 - SM241084 - SM241085

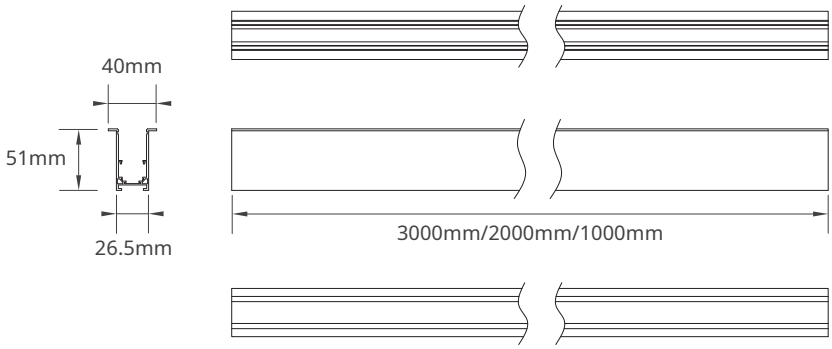

SM241086 - SM241087 - SM241088

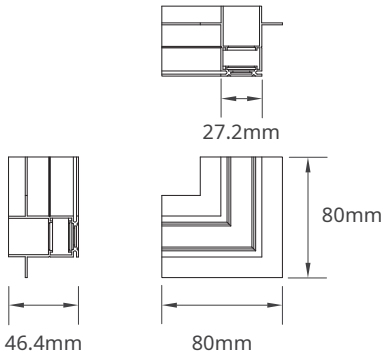

SM241089

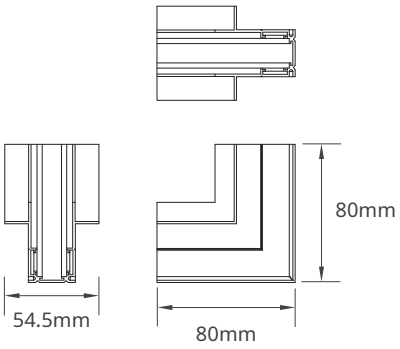

SM241090

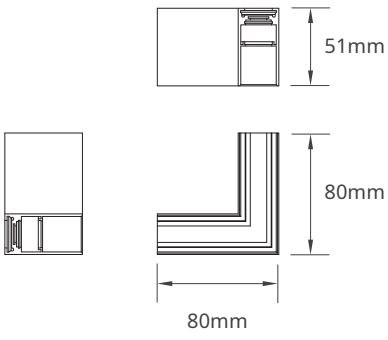

SM241091

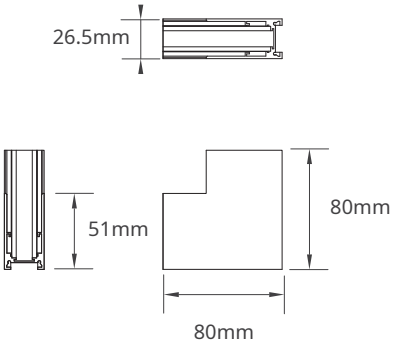

SM241092

SPECIFICATIONS

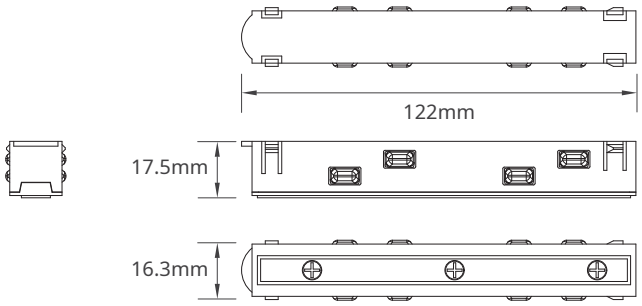

SM241093

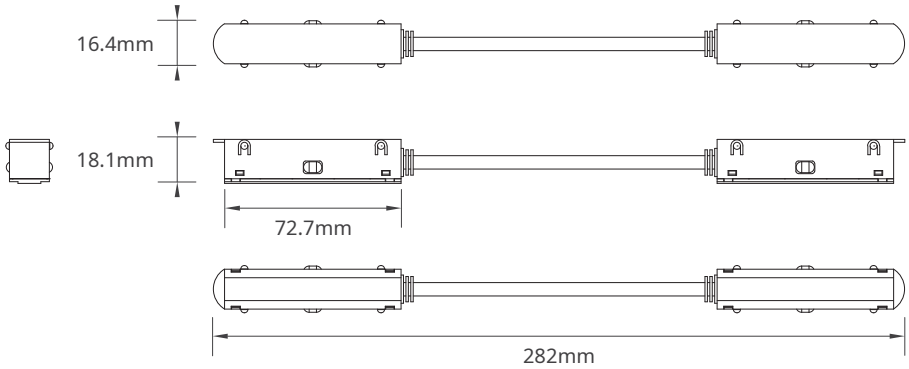

SM241094

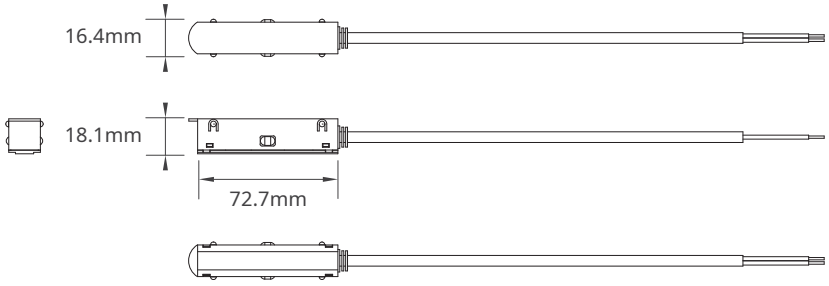

SM241095

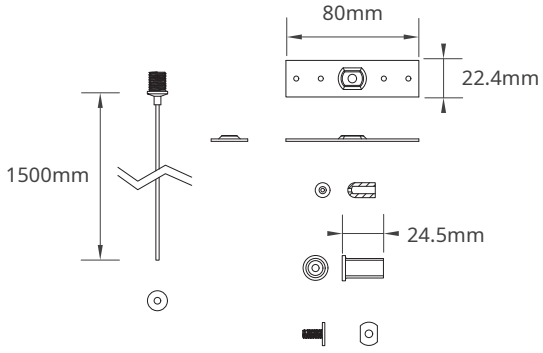

SM241091

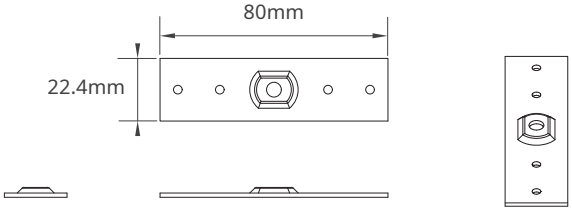

SM241092

APPLICATION PICTURE

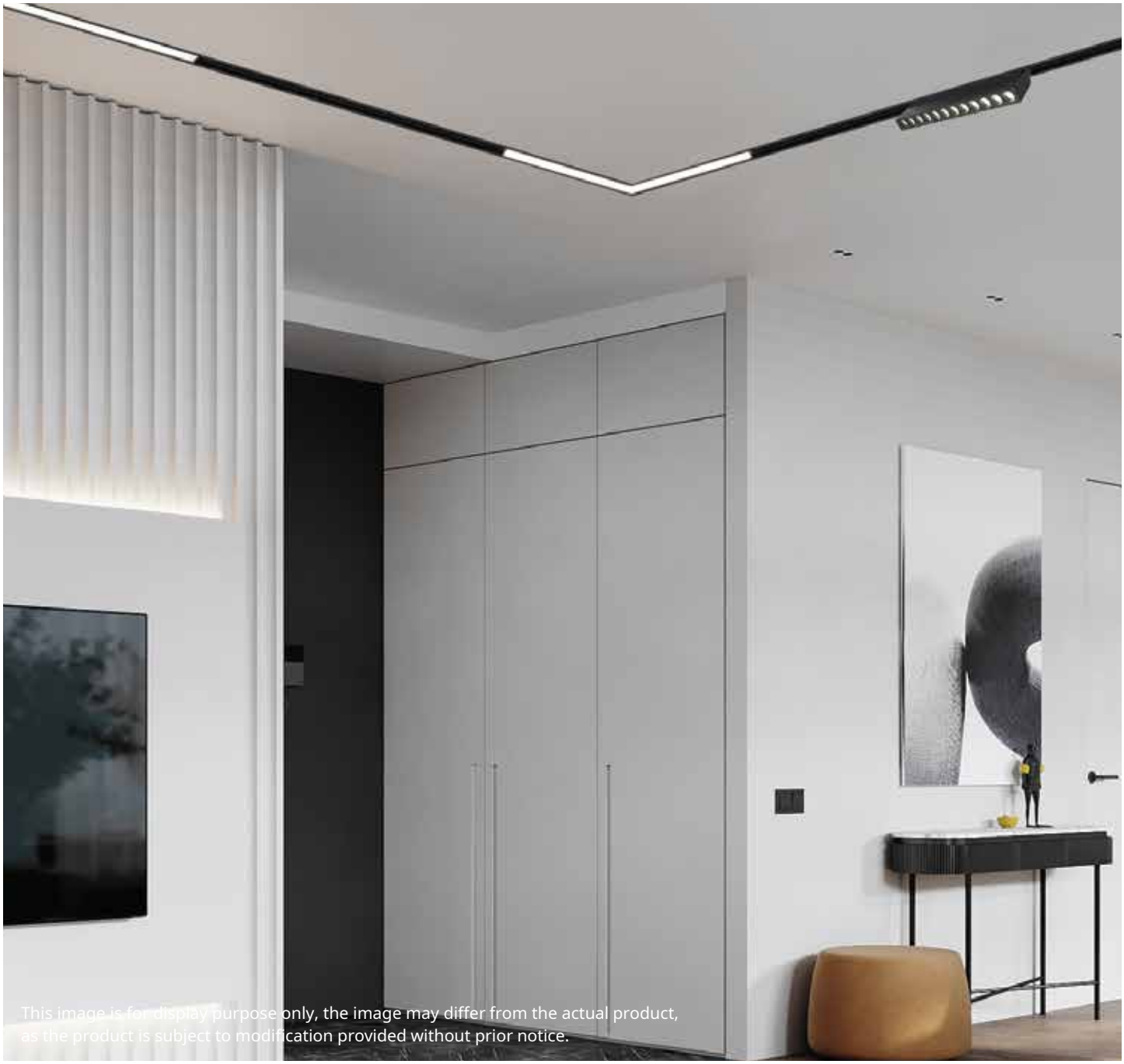

LED MAGNETIC TRACK FLOOD LIGHT (Corner)

SWITCH TO SIMON, STAY SECURE.

www.simonelectric.com

Website Facebook Youtube

Simon,S.A.U
Sancho de Ávila,66 Barcelona
E-08018(ES), BARCELONA, SPAIN
Tel. +34 902 109100
Web . www.simonelectric.com

Simon Electric (China)
Tel. +86 21 3855 5222
Web. www.simon.com.cn

Simon Electric (APAC)
Web. www.simon-apac.com
E-mail. info@simon-apac.com

PT Simon Elektrik Indonesia
Tel. +62 21 52960373
Web. www.simonelektrik.co.id